Appliance status: Z Valid from: 29.6.2018 Last modification: 29.4.2019 23:32:11

PRODUCT FICHE

ASKO

# Dishwasher
# 484493
# D5456S

## USP :

| | |
|---|---|
| Product group | Dishwasher |
| Image | |
| Cutlery basket | ✔ |
| Normal | Normal programme |
| Extra prewash and rinsing | Heavy program |
| Eco programme | ECO programme |
| Long dry | ✔ |
| Time saver option | ✔ |
| Number of spray zones | 9 |
| SCS - Super Cleaning System™ | ✔ |
| Turbo Drying™ | ✔ |
| 8 Steel™ - 8 of the most important parts in durable stainless steel | ✔ |
| Rinse-aid indication | Notification in display |
| Time remaining indicator | ✔ |
| Audio signal for end of washing cycle | Voice signal for the end of washing cycle |
| Hidden heater | ✔ |
| Exterior float- detects water leakage on the base | ✔ |

## Basic information :

| | |
|---|---|
| Installation type | Built-in |
| Product group | Dishwasher |
| Brand | ASKO |
| Product name / Family | Dishwasher |
| Commercial code | D5456S |
| Internal article number | 484493 |
| EAN code | 3838942044823 |
| Construction type | Built-in |
| Color / Material panel | VZ064; Colour of stainless steel / Synthetic material |
| Type of control | Mechanical and electronic |
| Color / Material body | / |
| Door panel options | Not possible |
| Main colour of product | VZ064; Colour of stainless steel |
| Tub material | Stainless steel |
| Hidden heating element | Yes |
| Connection Rating | 1800 W |
| Current | 10 A |
| Voltage | 220-240 |
| Frequency | 50 |
| Marks of conformity | CE,RCM,WMK08096 |
| Length of electrical supply cord | 182 cm |
| Plug type | AUS |
| Length inlet hose | 168 cm |
| Length outlet hose | 200.00 cm |
| Adjustable plinth | Vertical |
| Height with worktop | 820 mm |
| Adjustable feet | No |
| Back adjustable feet from front | No |
| Height | 820 mm |
| Width | 596 mm |
| Depth | 559 mm |
| Height of the packed product | 890 mm |
| Width of the packed product | 640 mm |
| Depth of the packed product | 680 mm |
| Min height of installation niche | 823 mm |
| Min width of installation niche | 600 mm |
| Depth of installation niche | 560 mm |

| | |
|---|---|
| Net weight | 45,5 Kg |
| Gross weight | 48,8 Kg |

## Features :

| | |
|---|---|
| Water protection system | Yes |
| Short description of the product | DW16.1-D5456S - CLASSIC |
| Number of programmes | 6 |
| Number of different wash temperatures | 0 |
| Quick wash | No |
| Intensive programme | No |
| Automatic programmes | No |
| Delicates programme | No |
| Water softener | No |
| Special glass care programme | No |
| Child saftety devices | / |
| Maximum temperature for water intake | 70 °C |
| Drying system | Fan assisted |
| Start delay options | Continuous |
| Stop delay or a start delay option | Start |
| Single basket washing | Not possible |
| Digital countdown indicator | Yes |
| End of cycle indicator | Sound and light signal |
| Salt light indicator | / |
| Rinse aid light indicator | Yes |
| List of programmes | Daily programme, ECO programme, Rinsing programme, Time programme, Standard programme, Heavy programme, |
| Interior light | No |
| Adjustable upper basket | No |
| Basket with handle | Yes |
| Software update | No |

## Energy label information / Performance :
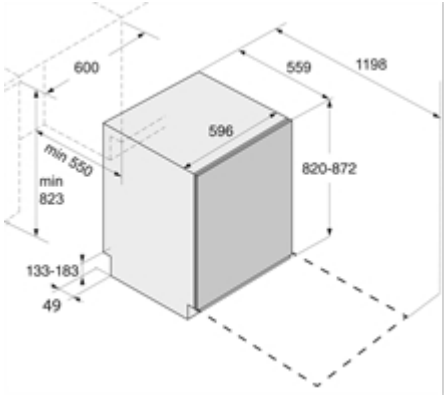
| | |
|---|---|
| Total annual water consumption | 0 l/annum |
| Power consumption in left-on mode - NEW (2010/30/EC) | 0,90 W |
| Power consumption in off-mode - NEW (2010/30/EC) | 0,20 W |
| Reference programme | 1 |
| Total cycle time of reference programme | 140 min |
| Cleaning performance | A |
| Drying performance | / |
| Number of place settings | 14 |
| Noise level | 46 dB(A) re 1 Pw |
| Energy efficiency class | / |
| Energy consumption annual - NEW (2010/30/EC) | 275,0 kWh/annum |