Appliance status: OW Valid from: 31.10.2017 Last modification: 14.5.2019 23:32:53

PRODUCT FICHE

ASKO

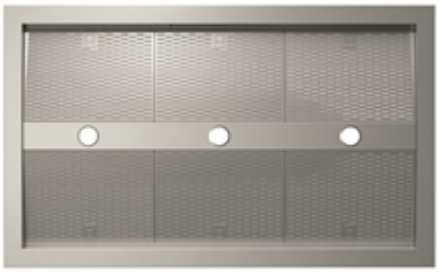

Kitchen hood
457798
CI4176S

USP :

Product group	Hood
Image	
Surface material	Stainless steel
Colour	Stainless steel
Max. noise level	66 dB(A)re 1 pW
Number of speed positions	3 venting speeds
Air Logic™ filter system	✔
Cloud Zone Fume trap	✔
Filter material	Stainless steel grease filter
Control setting	Button control
Illumination	Led lightning: 3 × 3 W
No return airflow flap	150 mm
Grease filter indicator	✔
Timer function	✔
Dishwasher safe grease filters	✔
Max. noise level	66 dB(A)re 1 pW

Basic information :

Product group	Kitchen hood
Decor panel options	/
Construction type	Free-standing
Brand	ASKO
Product name / Family	Kitchen hood
Commercial code	CI4176S
Internal article number	457798
EAN code	3838942331077
Color body	Inox
Material body	Stainless steel
Color chimney	Inox
Material chimney	Stainless steel
Typology	Decorative
Installation type	Island freestanding
Motor location	Integrated in decorative chimney
Operating mode	Convertible
Connection Rating	240 W
Current	10 A
Voltage	220-240
Frequenc	50
Approval certificates	CE
Length of electrical supply cord	150 cm
Plug type	AUS
Height of the chimney (mm)	750/1070
Height of product, without chimney	80 mm
Net weight	30,2 Kg
Gross weight	38,4 Kg
Width of the product	1150 mm
Height of the product	80 mm
Depth of the product	700 mm
Width of the packed product	1340 mm
Height of the packed product	522 mm
Depth of the packed product	804 mm
Air exhaust	Yes

Features :

Remote control	/
Short description of the product	ES11AIKBA-CI4176S
Type of control	Electronic
Type of manual control devices	Knobs

Number of motors	1
Total power of the motors	230 W
Number of speed settings	3
Boost position	Yes
Maximum output air extraction	783 m³/h
Maximum output recirculating air	/
Illumination setting	Steps
Number of lights	3
Type of lamps used	LED diode
Total power of the lamps	10 W
Max. noise level	66 dB(A) re 1 pW
Diameter of air outlet	150
No-return airflow flap	Yes
Grease filter material	Washable stainless steel
Odour filter	No

Energy label information / Performance :
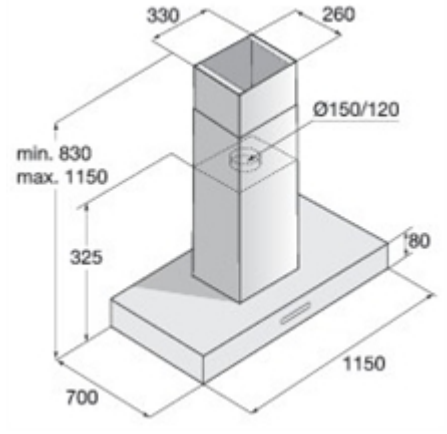
Air flow at intenstive or boost setting	/
Maximum Air flow	783 m³/h
Minimum air flow	225 m³/h
Total annual energy consumption	91,7 kWh/year
Energy efficiency class	C
Fluid Dynamic Efficiency class	C
Grease filtering efficiency class	B
Lighting efficiency	A
Noise level with boost position	68 dB
Sound power at max. speed	66 dB
Sound power at min. speed	37 dB
Maximum extraction rate by extraction operation	783 m³/h
Energy efficiency index (2010/30/EC)	75,2 %
Fluid Dynamic Efficiency (2010/30/EC)	20,7
Grease filtering efficiency (2010/30/EC)	86,0 %
Lighting efficiency (2010/30/EC)	28,6
Noice level with boost position	/
Power consumption in standby mode (2010/30/EC)	/
Power consumption in off-mode - NEW (2010/30/EC)	/